MIAMI-DADE COUNTY
DEPARTMENT OF REGULATORY AND ECONOMIC RESOURCES (RER)
BOARD AND CODE ADMINISTRATION DIVISION

MIAMI-DADE COUNTY
PRODUCT CONTROL SECTION
11805 SW 26 Street, Room 208
T (786) 315-2590 F (786) 315-2599
www.miamidade.gov/economy

NOTICE OF ACCEPTANCE (NOA)

Gensteel Doors Inc.
4950 Hickmore Street
Ville St. Laurent, Quebec, Canada H4T1K6

SCOPE:

This NOA is being issued under the applicable rules and regulations governing the use of construction materials. The documentation submitted has been reviewed and accepted by Miami-Dade County RER -Product Control Section to be used in Miami Dade County and other areas where allowed by the Authority Having Jurisdiction (AHJ).

This NOA shall not be valid after the expiration date stated below. The Miami-Dade County Product Control Section (In Miami Dade County) and/or the AHJ (in areas other than Miami Dade County) reserve the right to have this product or material tested for quality assurance purposes. If this product or material fails to perform in the accepted manner, the manufacturer will incur the expense of such testing and the AHJ may immediately revoke, modify, or suspend the use of such product or material within their jurisdiction. RER reserves the right to revoke this acceptance, if it is determined by Miami-Dade County Product Control Section that this product or material fails to meet the requirements of the applicable building code.

This product is approved as described herein and has been designed to comply with the Florida Building Code, including the High Velocity Hurricane Zone.

DESCRIPTION: Series "GenStorm" Steel Storefront System – L.M.I.

APPROVAL DOCUMENT: Drawing No. **AD14-01**, titled "GenStorm Steel Storefront System – LMI", sheets 1 through 8 of 8, dated 09/18/14 and last revised on DEC 14, 2021, prepared by MCY Engineering, Inc., signed and sealed by Yiping Wang, P.E., bearing the Miami-Dade County Product Control Revision stamp with the Notice of Acceptance number and expiration date by the Miami-Dade County Product Control Section.

MISSILE IMPACT RATING: Large and Small Missile Impact Resistant

LABELING: Each unit shall bear one of the following permanent labels:

Gensteel Doors Inc.	Gensteel Doors Inc.	Gensteel Doors USA
4950 Hickmore Street	2335 Industrial Park Drive	1551 Fairground Road
Ville St. Laurent, Quebec, Canada H4T1K6	Cornwall, Ontario, Canada K6H7M4	Madison, Georgia USA 30650

and series and the statement: "Miami-Dade County Product Control Approved".

RENEWAL of this NOA shall be considered after a renewal application has been filed and there has been no change in the applicable building code negatively affecting the performance of this product.

TERMINATION of this NOA will occur after the expiration date or if there has been a revision or change in the materials, use, and/or manufacture of the product or process. Misuse of this NOA as an endorsement of any product, for sales, advertising or any other purposes shall automatically terminate this NOA. Failure to comply with any section of this NOA shall be cause for termination and removal of NOA.

ADVERTISEMENT: The NOA number preceded by the words Miami-Dade County, Florida, and followed by the expiration date may be displayed in advertising literature. If any portion of the NOA is displayed, then it shall be done in its entirety.

INSPECTION: A copy of this entire NOA shall be provided to the user by the manufacturer or its distributors and shall be available for inspection at the job site at the request of the Building Official.

This NOA **revises NOA# 19-0731.02** and consists of this page 1 and evidence pages E-1, E-2 and E-3, as well as approval document mentioned above.

The submitted documentation was reviewed by **Ishaq I. Chanda, P.E.**

MIAMI-DADE COUNTY APPROVED

Ishaq I. Chanda

NOTICE OF ACCEPTANCE: EVIDENCE SUBMITTED

1. EVIDENCE SUBMITTED UNDER PREVIOUS NOA's

A. DRAWINGS

1. Manufacturer's die drawings and sections. ***(Submitted under NOA# 14-1602.07)***

2. Drawing No **AD14-01**, titled "GenStorm Steel Storefront System – LMI & SMI", sheets 1 through 8 of 8, dated 09/18/14, with revision #1 dated 03/29/18, prepared by MCY Engineering, Inc., signed and sealed by Yiping Wang, P.E.

B. TESTS

1. Test reports on: 1) Air Infiltration Test, per FBC, TAS 202-94
2) Uniform Static Air Pressure Test, Loading per FBC TAS 202-94
3) Water Resistance Test, per FBC, TAS 202-94
4) Large Missile Impact Test per FBC, TAS 201-94
5) Cyclic Wind Pressure Loading per FBC, TAS 203-94
6) Forced Entry Test, per FBC 2411 3.2.1, TAS 202-94

along with marked-up drawings and installation diagram of a steel storefront system with outswing steel double doors, prepared by Fenestration Testing Laboratory, Inc., Test Report No. **FTL-7224**, dated 12/17/13, signed and sealed by Marlin D. Brinson, P.E.

C. CALCULATIONS

1. Anchor verification calculations and structural analysis, complying with **FBC 5th Edition (2014),** dated 05/26/14 and 09/15/14, prepared by MCY Engineering, Inc., signed and sealed by Yiping Wang, P.E.

2. Glazing complies with **ASTM E1300-04.**

D. QUALITY ASSURANCE

1. Miami-Dade Department of Regulatory and Economic Resources (RER)

E. MATERIAL CERTIFICATIONS

1. NOA No. **13-0129.27** issued to **E.I. DuPont DeNemours & Co., Inc.** for their **"DuPont Butacite® PVB Interlayer**", expiring on 12/11/16**.**

2. NOA No. **13-0909.10** issued to **Polymer Extrusion Technology, Inc. dba Glasslam** for their **"Glasslam Safety-Plus II Glass Interlayer**", expiring on 08/07/18.

3. NOA No. **13-0717.01** issued to **Sabic Innovative Plastics** for their **"Lexan® Polycarbonate Sheet Products"**, expiring on 07/17/18.

F. STATEMENTS

1. Statement letter of conformance, complying with **FBC 5th Edition (2014),** with **FBC 6th Edition (2017),** and of no financial interest, dated January 2, 2018, issued by MCY Engineering, Inc., signed and sealed by Yiping Wang, P.E

2. Proposal No. **12-0796** issued by the Product Control Section, dated July 10, 2012, signed by Manuel Perez, P.E.

Ishaq I. Chanda

Ishaq I. Chanda, P.E.
Product Control Unit Supervisor
NOA No. 20-1230.08
Expiration Date: October 02, 2022
Approval Date: September 02, 2021

NOTICE OF ACCEPTANCE: EVIDENCE SUBMITTED

F. STATEMENTS (CONTINUED)

3. Distributor Agreement between Gensteel Doors, Inc., Quebec Canada and North American Door Corp., Plattsburgh, New York, dated May 15, 2014, signed by Bruno Gervasi and Antonio Gervasi, respectively.

G. OTHERS

1. None.

2. EVIDENCE SUBMITTED under previous approval

A. DRAWINGS

1. Drawing No **AD14-01**, titled "GenStorm Steel Storefront System – LMI & SMI", sheets 1 through 8 of 8, dated 09/18/14, with revision #1 dated 03/29/18, prepared by MCY Engineering, Inc., signed and sealed by Yiping Wang, P.E.

B. TESTS

1. None

C. CALCULATIONS

1. Anchor verification calculations and structural analysis, complying with **FBC 6th Edition (2017),** 06/10/19 and 07/0915/19, prepared by MCY Engineering, Inc., signed and sealed by Yiping Wang, P.E.

D. QUALITY ASSURANCE

1. Miami-Dade Department of Regulatory and Economic Resources (RER)

E. MATERIAL CERTIFICATIONS

1. NOA No. **19-0305.02** issued to **Kuraray America, Inc.** for their "**Trosifol® Ultraclear, Clear and Color PVB Glass Interlayers**" expiring on 07/08/24.

2. NOA No. **18-0619.01**issued to **Polymer Extrusion Technology, Inc.** dba Glasslam for their **"Glasslam Safety-Plus II Glass Interlayer**", expiring on 08/07/23.

3. NOA No. **15-0915.08** issued to **Sabic Innovative Plastic, US, LLC** for their "**LEXAN® Polycarbonate Sheet Products**" dated 12/10/15, expiring on 07/17/18.

F. STATEMENTS

1. Statement letter of conformance, complying with **FBC 6th Edition (2017),** and of no financial interest, dated 06/10/2019, issued by MCY Engineering, Inc., signed and sealed by Yiping Wang, P.E.

G. OTHERS

1. NOA No. **18-0116.15**, issued to Gensteel Doors Inc., for their Series "GenStorm" Steel Storefront System - L.M.I., approved on 05/03/18 and expiring on 10/02/19.

Ishaq I. Chanda

Ishaq I. Chanda, P.E.
Product Control Unit Supervisor
NOA No. 20-1230.08
Expiration Date: October 02, 2022
Approval Date: September 02, 2021

NOTICE OF ACCEPTANCE: EVIDENCE SUBMITTED

3. NEW EVIDENCE SUBMITTED

A. DRAWINGS

1. Drawing No. **AD14-01**, titled "GenStorm Steel Storefront System – LMI", sheets 1 through 8 of 8, dated 09/18/14 and last revised on DEC 14, 2021, prepared by MCY Engineering, Inc., signed and sealed by Yiping Wang, P.E.

B. TESTS

1. None.

C. CALCULATIONS

1. None.

D. QUALITY ASSURANCE

1. Miami-Dade Department of Regulatory and Economic Resources (RER)

E. MATERIAL CERTIFICATIONS

1. NOA No. **19-0305.02** issued to **Kuraray America, Inc.** for their "**Trosifol® Ultraclear, Clear and Color PVB Glass Interlayers**" expiring on 07/08/24.

2. NOA No. **18-0619.01**issued to **Polymer Extrusion Technology, Inc.** dba Glasslam for their **"Glasslam Safety-Plus II Glass Interlayer**", expiring on 08/07/23.

3. NOA No. **18-0207.07** issued to **Sabic Innovative Plastic, US, LLC** for their "**LEXAN® Polycarbonate Sheet Products**", expiring on 04/01/22.

F. STATEMENTS

1. Statement letter of conformance, complying with **FBC 7th Edition (2020),** and of no financial interest, dated 12/14/2021, issued by MCY Engineering, Inc., signed and sealed by Yiping Wang, P.E.

2. Acknowledgement letter dated July 19, 2021, issued by GensteelDoors for conditional one year approval subjected to terms and conditions of the letter.

G. OTHERS

1. This NOA conditionally **revises, NOA# 19-0731.02**, expiring 10/02/22.

2. This NOA can be revised up to OCT 02, 2024, upon meeting condition **F** (**2**).

Ishaq I. Chanda

Ishaq I. Chanda, P.E.
Product Control Unit Supervisor
NOA No. 20-1230.08
Expiration Date: October 02, 2022
Approval Date: September 02, 2021

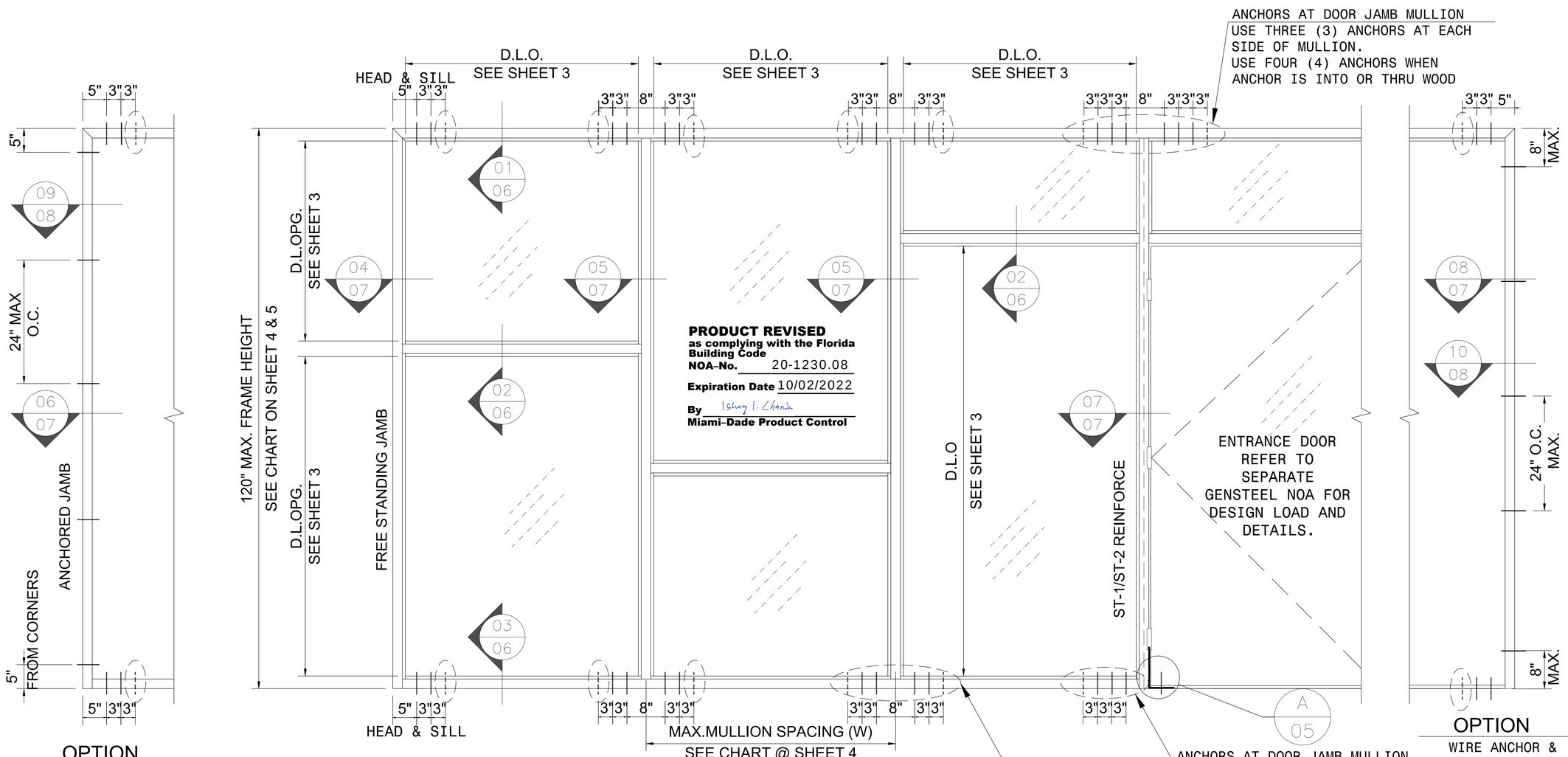

TYPICAL ELEVATION

PRODUCT REVISED
as complying with the Florida Building Code
NOA-No. 20-1230.08
Expiration Date 10/02/2022
By Ishwar I. Chand
Miami-Dade Product Control

GENSTEEL STEEL STORE FRONT SYSTEM

- THIS SYSTEM MAY BE USED IN CONJUNCTION WITH MIAMI-DADE COUNTY APPROVED ENTRANCE DOORS BY 'GENSTEEL DOORS INC.'
  CODE REQUIREMENTS FOR SAFEGUARDS MUST BE OBSERVED.
- THIS PRODUCT HAS BEEN DESIGNED AND TESTED TO COMPLY WITH THE REQUIREMENTS OF THE 7TH EDITION OF FLORIDA BUILDING CODE 2020 INCLUDING HIGH VELOCITY HURRICANE ZONE (HVHZ).
- ANCHORS SHALL BE AS LISTED, SPACED AS SHOWN ON ELEVATION & DETAILS. ANCHORS EMBEDMENT TO BASE MATERIAL SHALL BE BEYOND WALL DRESSING OR STUCCO.
- ANCHORING OR LOADING CONDITIONS NOT SHOWN IN THESE DETAILS ARE NOT PART OF THIS APPROVAL.
- MATERIALS INCLUDING BUT NOT LIMITED TO STEEL/METAL SCREWS, THAT COME INTO CONTACT WITH OTHER DISSIMILAR MATERIALS SHALL MEET THE REQUIREMENTS OF 7TH EDITION OF FLORIDA BLDG. CODE 2020 SECTION AS APPLICABLE.
- ULTIMATE DESIGN LOAD OBTAINED FROM ASCE 7-16, MULTIPLY BY 0.6 SHALL BE LESS THAN OR EQUAL TO DESIGN LOAD IN THIS DOCUMENT.
  WOOD BUCKS MUST BE PROPERLY ATTACHED TO SUBSTRATE TO TRANSMIT WIND LOADS TO THE STRUCTURE .

INSTRUCTIONS:

USE CHARTS AS FOLLOWS:

STEP 1 DETERMINE DESIGN WIND LOAD REQUIREMENTS BASED ON WIND VELOCITY, BLDG. HEIGHT, WIND ZONE USING ASCE 7-16 ALLOWABLE LOAD.

STEP 2 SEE CHARTS ON SHEETS 3 FOR DESIGN LOAD CAPACITY OF DESIRED GLASS SIZE AND GLASS TYPE.

STEP 3 CHECK MULLION CAPACITY FOR A GIVEN SPACING AND HEIGHT USING CHARTS ON SHEET 4.
USE CHARTS ON SHEET 5 TO DETERMINE THE ALLOWABLE LOADS ON DOOR JAMB MULLION.

STEP 4 THE LOWEST VALUE RESULTING FROM STEPS 2 AND 3 SHALL APPLY TO ENTIRE SYSTEM.

STEP 5 FOR ANCHOR OPTIONS SEE SHEET 4.

MIAMI DADE COUNTY

YIPING WANG LICENSE No 55983 STATE OF FLORIDA PROFESSIONAL ENGINEER

YIPING WANG, P.E.
FLORIDA REGISTRATION
P.E. #55983
C.A.N. 28677

December 24th, 2020

REVISIONS

NO.	DATE	DESCRIPTION
1	03.29.18	UPDATE TO 2017 FBC
2	11.24.20	UPDATE TO 2020 FBC

MCY ENGINEERING, INC.
GLAZING CONSULTANTS
12781 Miramar Parkway #301 P:(305) 271-0117
Miramar, FL 33027
www.MCYEngineering.com mcy@mcyengineering.com

GENSTORM STEEL STOREFRONT SYSTEM - LMI & SMI

gensteel doors
www.gensteeldoors.com
4950 Hickmore, St. Laurent, Quebec, Canada, H4T1K6
Tel: (514) 733-3562 Fax: (514) 733-1932

DATE	11/24/2020
SCALE	AS NOTED
DRAWN	C.Y.
PROJECT	MCY 14-014

DRAWING NO.
AD14-01

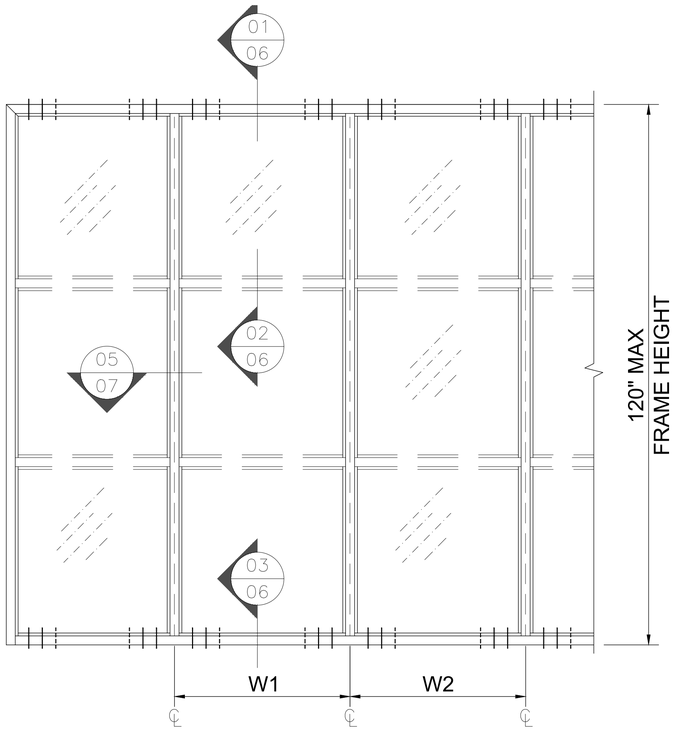

WIDTH (W) = $\frac{W1+W2}{2}$

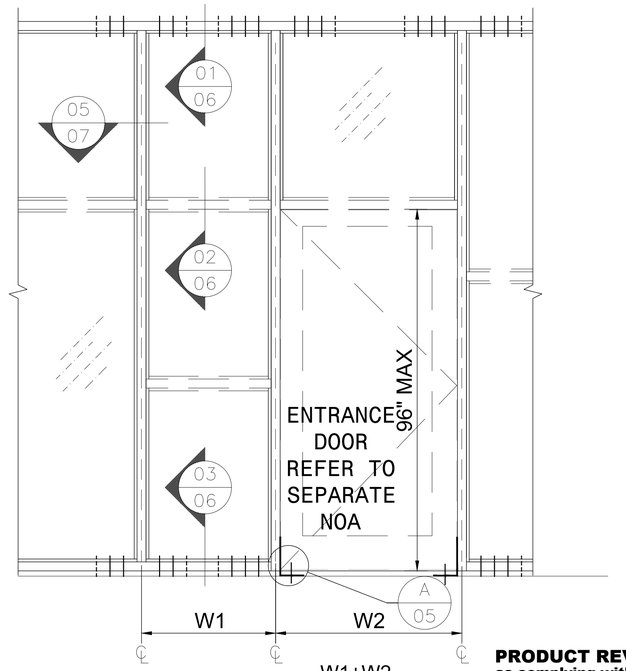

WIDTH (W) = $\frac{W1+W2}{2}$

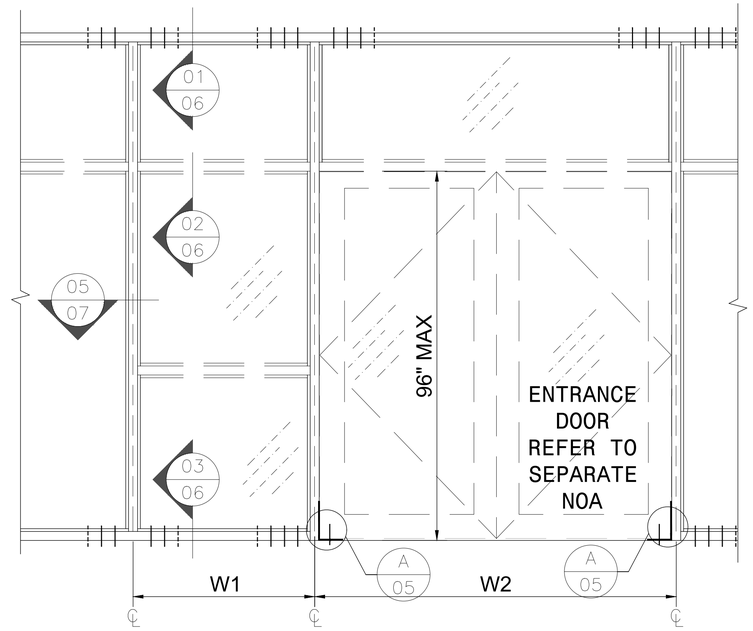

WIDTH (W) = $\frac{W1+W2}{2}$

ELEVATIONS FOR MULLION
(WITH STEEL REINFORCEMENT)

PRODUCT REVISED
as complying with the Florida Building Code
NOA-No. 20-1230.08
Expiration Date 10/02/2022
By Ishaq I. Chanda
Miami-Dade Product Control

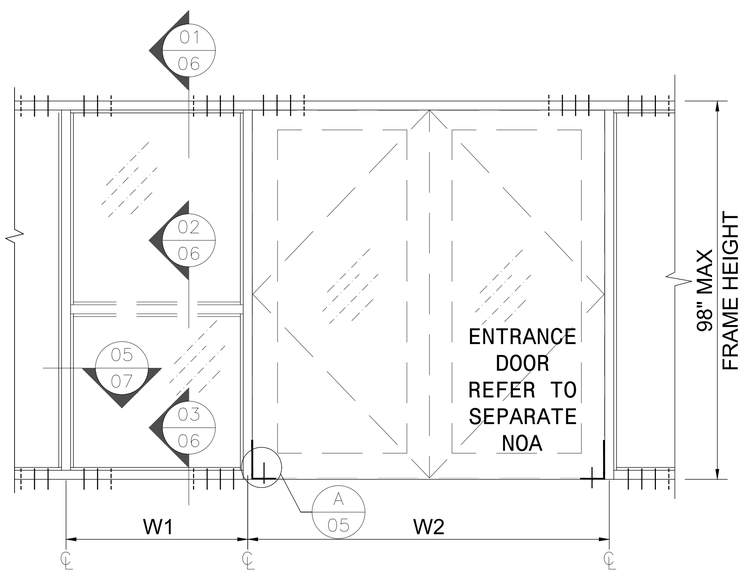

WIDTH (W) = $\frac{W1}{2}+\frac{W2}{4}$

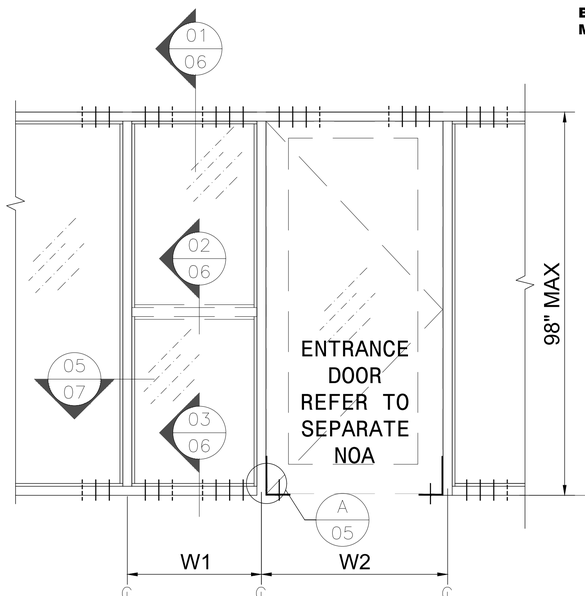

WIDTH (W) = $\frac{W1+W2}{2}$

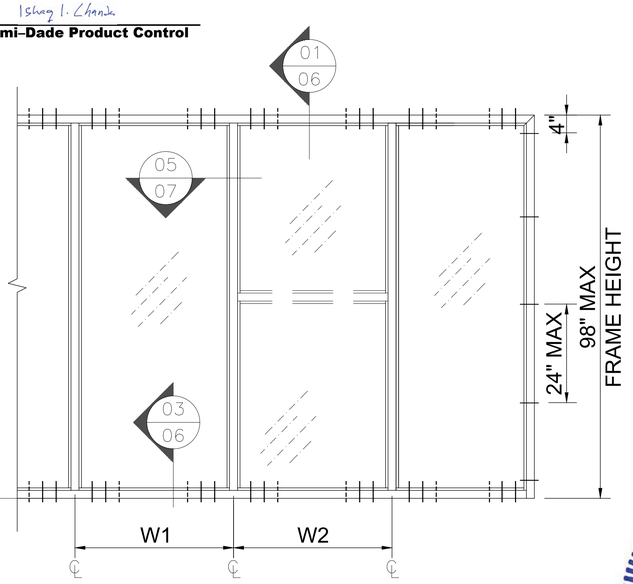

WIDTH (W) = $\frac{W1+W2}{2}$

ELEVATIONS FOR MULLION
(WITHOUT STEEL REINFORCEMENT)

MIAMI-DADE COUNTY
YIPING WANG, P.E.
FLORIDA REGISTRATION
No. PE #55983
C.A.N. 28677

YIPING WANG
LICENSE
No 55983
STATE OF FLORIDA
PROFESSIONAL ENGINEER

December 24th, 2020

REVISIONS		
NO.	DATE	DESCRIPTION
1	03.29.18	UPDATE TO 2017 FBC
2	11.24.20	UPDATE TO 2020 FBC

MCY ENGINEERING, INC.
GLAZING CONSULTANTS
12781 Miramar Parkway #301 P:(305) 271-0117
Miramar, FL 33027
www.MCYEngineering.com mcy@mcyengineering.com

GENSTORM STEEL STOREFRONT SYSTEM - LMI & SMI

Gensteel doors
www.gensteeldoors.com
4950 Hickmore, St. Laurent, Quebec, Canada, H4T1K6
Tel: (514) 733-3562 Fax: (514) 733-1932

DATE	11/24/2020
SCALE	AS NOTED
DRAWN	C.Y.
PROJECT	MCY 14-014

DRAWING NO.
AD14-01

EXTERIOR GLAZED OPTION

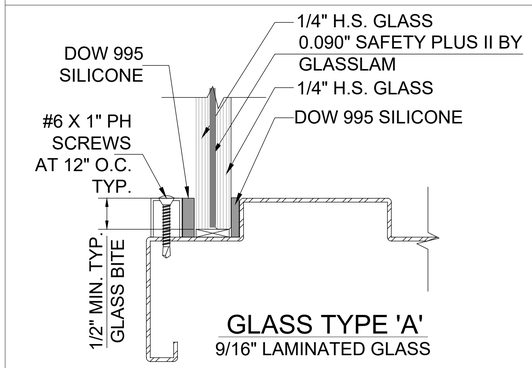

GLASS TYPE 'A'
9/16" LAMINATED GLASS

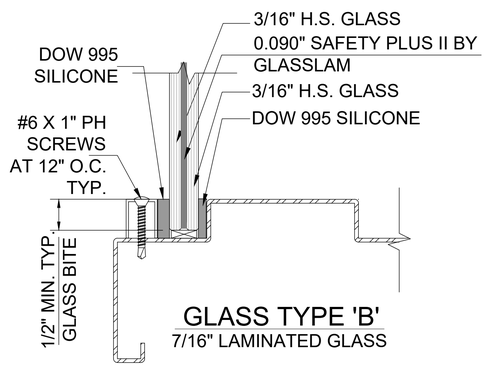

GLASS TYPE 'B'
7/16" LAMINATED GLASS

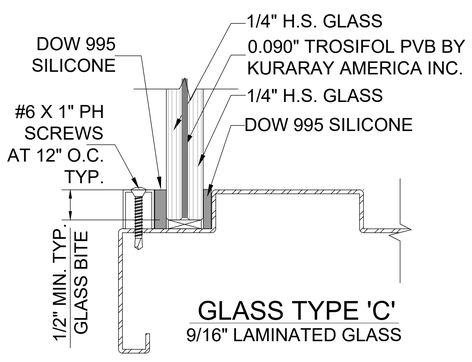

GLASS TYPE 'C'
9/16" LAMINATED GLASS

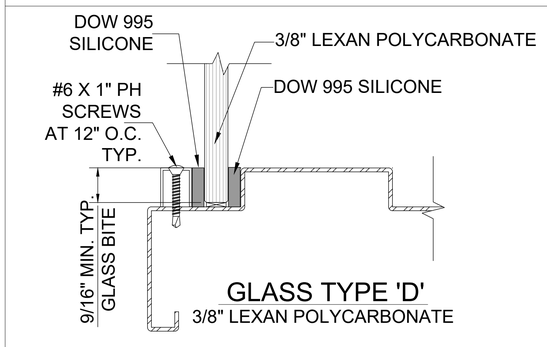

GLASS TYPE 'D'
3/8" LEXAN POLYCARBONATE

INTERIOR GLAZED OPTION

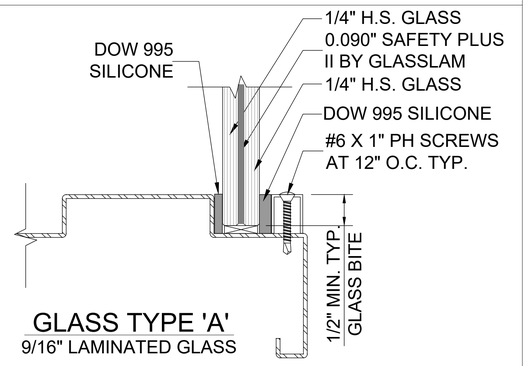

GLASS TYPE 'A'
9/16" LAMINATED GLASS

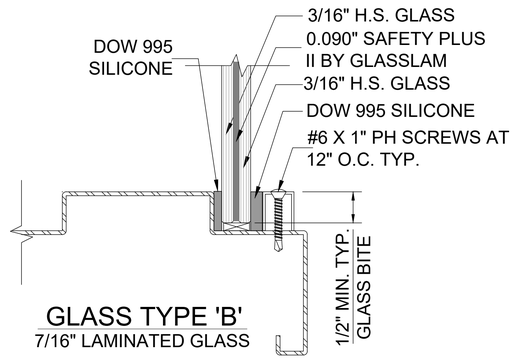

GLASS TYPE 'B'
7/16" LAMINATED GLASS

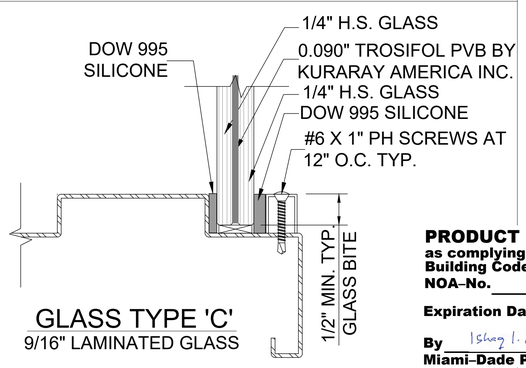

GLASS TYPE 'C'
9/16" LAMINATED GLASS

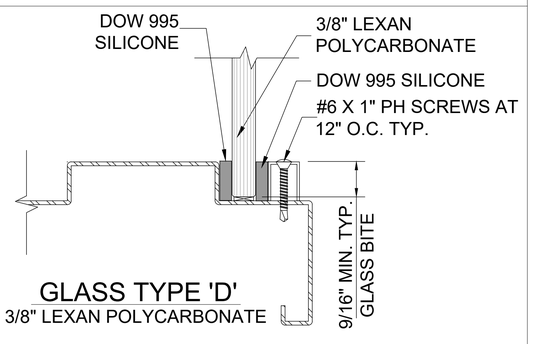

GLASS TYPE 'D'
3/8" LEXAN POLYCARBONATE

PRODUCT REVISED
as complying with the Florida Building Code
NOA-No. 20-1230.08
Expiration Date 10/02/2022
By Ishwar I. Chandu
Miami-Dade Product Control

GLASS DESIGN LOAD CAPACITY - PSF

D.L.O. WIDTH (IN)	D.L.O. HEIGH (IN)	GLASS AREA FT²	GLASS TYPES "A" EXT.(+)/ INT.(-)	"B" EXT.(+)/ INT.(-)	"C" EXT.(+)/ INT.(-)
39	60	16.25	70	80	70
42		17.5	70	80	70
45		18.75	70	80	-
48		20	70	80	-
51		21.25	70	80	-
54		22.5	70	-	-
36	66	16.5	70	80	70
39		17.875	70	80	70
42		19.25	70	80	70
45		20.625	70	80	-
48		22	70	-	-
51		23.375	70	-	-
30	72	15.00	70	80	70
33		16.50	70	80	70
36		18.00	70	80	70
39		19.50	70	80	-
42		21.00	70	80	-
45		22.50	70	-	-
27	78	14.63	70	80	70
30		16.25	70	80	70
33		17.88	70	80	70
36		19.50	70	80	-
39		21.13	70	80	-
42		22.75	70	-	-

GLASS DESIGN LOAD CAPACITY - PSF

D.L.O. WIDTH (IN)	D.L.O. HEIGH (IN)	GLASS AREA FT²	GLASS TYPES "A" EXT.(+)/ INT.(-)	"B" EXT.(+)/ INT.(-)	"C" EXT.(+)/ INT.(-)
30.75	80.88	17.27	70	80	70
24	84	14.00	70	80	70
27		15.75	70	80	70
30		17.50	70	80	70
33		19.25	70	80	-
36		21.00	70	80	-
39		22.75	70	-	-
21	90	13.13	70	80	70
24		15.00	70	80	70
27		16.88	70	80	70
30		18.75	70	80	-
33		20.63	70	80	-
36		22.50	70	-	-
32.75	91.75	20.87	70	80	-
34.875	94.56	22.90	70	-	-
21	96	14.00	70	80	70
24		16.00	70	80	70
27		18.00	70	80	70
30		20.00	70	80	-
33		22.00	70	-	-

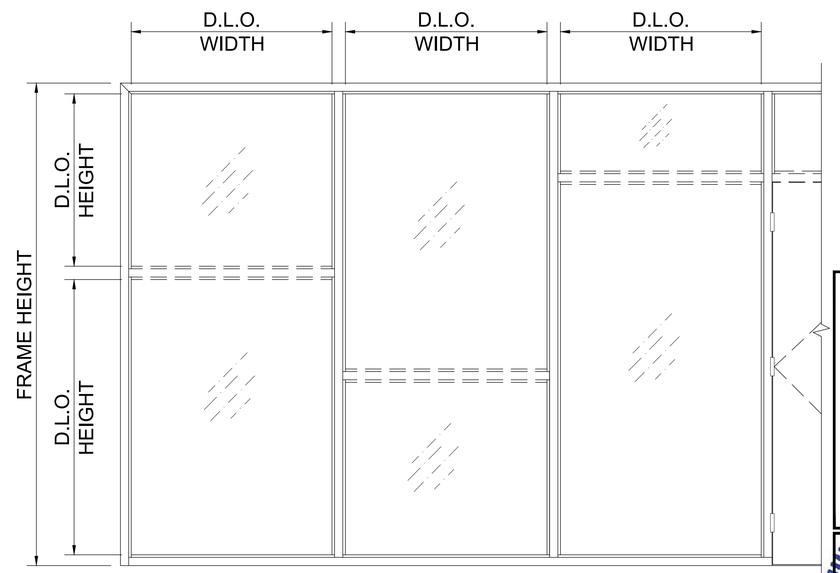

NOTE:
GLASS CAPACITIES ON THIS SHEET ARE BASED ON ASTM E1300 (3 SEC. GUSTS)

VALUES SHOWN ABOVE ARE MAXIMUM DAYLITE OPENING DIMENSIONS. FOR GLASS. CONSULT WITH CHARTS AT SHEET 4 FOR MULLION CAPACITY.

YIPING WANG, P.E.
LICENSE No. 55983
STATE OF FLORIDA
PROFESSIONAL ENGINEER

MIAMI-DADE COUNTY
YIPING WANG, P.E.
FLORIDA REGISTRATION
No. PE #55983
C.A.N. 28677

December 24th, 2020

REVISIONS

NO.	DATE	DESCRIPTION
1	03.29.18	UPDATE TO 2017 FBC
2	11.24.20	UPDATE TO 2020 FBC

MCY ENGINEERING, INC.
GLAZING CONSULTANTS
12781 Miramar Parkway #301 P:(305) 271-0117
Miramar, FL 33027
www.MCYEngineering.com mcy@mcyengineering.com

GENSTORM STEEL STOREFRONT SYSTEM - LMI & SMI

Gensteel doors
www.gensteeldoors.com
4950 Hickmore, St. Laurent, Quebec, Canada, H4T1K6
Tel: (514) 733-3562 Fax: (514) 733-1932

DATE	11/24/2020
SCALE	AS NOTED
DRAWN	C.Y.
PROJECT	MCY 14-014

DRAWING NO.
AD14-01

MULLION/JAMB LOAD CAPACITY - PSF

NOMINAL DIMS.		FREE STANDING JAMB	UNREINF. MULLION	REINF. MULLION
WIDTH (W)	FRAME HEIGHT	EXT.(+) & INT.(-)	EXT.(+) & INT.(-)	EXT.(+) & INT.(-)
IN	IN	PSF	PSF	PSF
24	72	70	70	80
27		70	70	80
30		70	70	80
33		70	70	80
36		70	70	80
39		70	70	80
42		70	70	80
45		70	70	80
48		70	70	80
51		70	-	80
54		70	-	80
57		70	-	80
60		70	-	80
24	78	70	70	80
27		70	70	80
30		70	70	80
33		70	70	80
36		70	70	80
39		70	70	80
42		70	70	80
45		70	70	80
48		70	-	80
51		70	-	80
54		70	-	80
24	84	70	70	80
27		70	70	80
30		70	70	80
33		70	70	80
36		70	70	80
39		70	70	80
42		70	70	80
45		70	-	80
48		70	-	80
51		70	-	80
24	90	70	70	80
27		70	70	80
30		70	70	80
33		70	70	80
36		70	70	80
39		70	70	80
42		70	-	80
45		70	-	80
48		70	-	80

MULLION/JAMB LOAD CAPACITY - PSF

NOMINAL DIMS.		FREE STANDING JAMB	UNREINF. MULLION	REINF. MULLION
WIDTH (W)	FRAME HEIGHT	EXT.(+) & INT.(-)	EXT.(+) & INT.(-)	EXT.(+) & INT.(-)
IN	IN	PSF	PSF	PSF
24	96	70	70	80
27		70	70	80
30		70	70	80
33		70	70	80
36		70	70	80
39		70	-	80
42		70	-	80
45		70	-	80
24	98	70	70	80
27		70	70	80
30		70	70	80
33		70	70	80
36		70	70	80
39		70	-	80
42		70	-	80
24	102	70	-	80
27		70	-	80
30		70	-	80
33		70	-	80
36		70	-	80
39		70	-	80
42		70	-	80
24	108	70	-	80
27		70	-	80
30		70	-	80
33		70	-	80
36		70	-	80
39		70	-	80
24	114	70	-	80
27		70	-	80
30		70	-	80
33		70	-	80
36		70	-	80
24	120	70	-	80
27		70	-	80
30		70	-	80
33		70	-	80
36		70	-	80

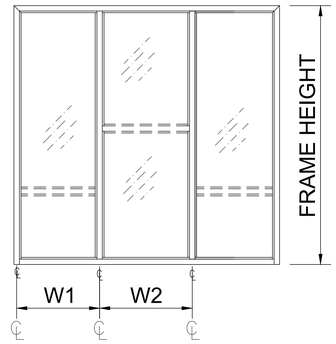

$$WIDTH(W)=\frac{W1+W2}{2}$$

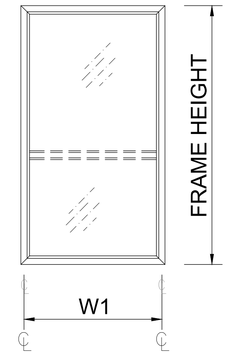

$$WIDTH(W)=W1$$

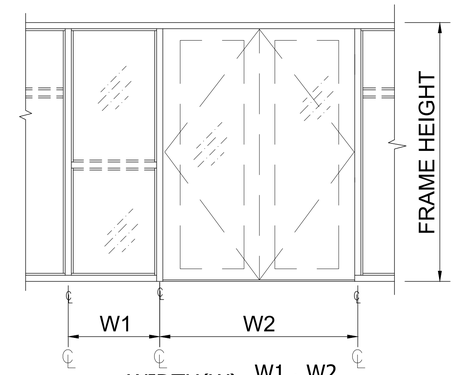

$$WIDTH(W)=\frac{W1}{2}+\frac{W2}{4}$$

TYPICAL ANCHORS: SEE ELEV. FOR SPACING

ANCHOR TYPE "AA":
1/4" TAPCON BY 'ITW' (Fu=120 ksi, Fy=92 Ksi)
1/4" ULTRACON+ BY 'DEWALT' (Fu=164 ksi, Fy=148 Ksi)
INTO 2BY WOOD BUCKS OR WOOD STRCUTURES
WITH 1 1/2" EMBEDMENT
OR THRU WOOD BUCK INTO CONCRETE OR MASONRY
WITH 1 3/4" EMBEDMENT

ANCHOR TYPE "A":
1/4" TAPCON BY 'ITW' (Fu=120 ksi, Fy=92 Ksi)
1/4" ULTRACON+ BY 'DEWALT' (Fu=164 ksi, Fy=148 Ksi)
1 3/4" EMBEDMENT INTO CONCRETE
1 3/4" EMBEDMENT INTO MASONRY (JAMB ONLY)

ANCHOR TYPE "BB":
5/16" ULTRACON BY 'DEWALT' (Fu=177 ksi, Fy=155 Ksi)
INTO 2BY WOOD BUCKS OR WOOD STRCUTURES
WITH 1 1/2" EMBEDMENT
OR THRU WOOD BUCK INTO CONCRETE OR MASONRY
WITH 1 3/4" EMBEDMENT

ANCHOR TYPE "B":
5/16" ULTRACON BY 'DEWALT' (Fu=177 ksi, Fy=155 Ksi)
1 3/4" EMBEDMENT INTO CONCRETE
1 3/4" EMBEDMENT INTO MASONRY (JAMB ONLY)

ANCHOR TYPE "C":
5/16" DIA. SMS OR MACHINE BOLTS (MIN. GRADE 2 CRS) OR ST/ST
INTO METAL STRUCTURES
STEEL:1/8" THK (12GA.) MIN. (Fy=36 KSI)
ALUMINUM: 1/8" THK. (6063-T5 MIN)
(STEEL IN CONTACT WITH ALUMINUM TO BE PAINTED.)

ANCHOR TYPE "D":
WIRE ANCHOR INTO GROUT FILLED BLOCK
SEE DETAIL 08/07 (JAMB ONLY)

ANCHOR TYPE "F":
ADJUSTABLE "T" ANCHOR INTO GROUT FILLED BLOCK
SEE DETAIL 10/08 (JAMB ONLY)

TYPICAL EDGE DISTANCE

INTO CONCRETE = 2-1/2" MIN.
INTO METAL STRUCTURE = 3/4" MIN.
INTO WOOD STRUCTURE = 1 1/4" MIN.
INTO HOLLOW BLOCK = 4" MIN. FOR 1/4" TAPCON

INTO GROUT FILLED BLOCK = 2 1/2" MIN.
C-90 HOLLOW/FILLED BLOCK AT JAMB fm'=2 KSI
CONCRETE AT HEAD, SILL OR JAMB fc'=3 KSI
2 1/2" MIN. FOR 1/4" ULTRACON+
3 1/8" MIN. FOR 5/16" ULTRACON

SEALANTS:

ALL FRAME CORNERS AND MULLION SEAMS
SEALED WITH SILICONE.

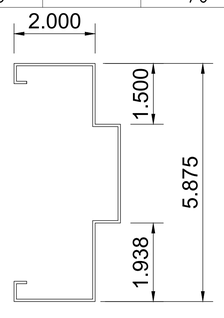

JAMB

Ix = 3.8211 in^4
Sx = 1.2911 in^3

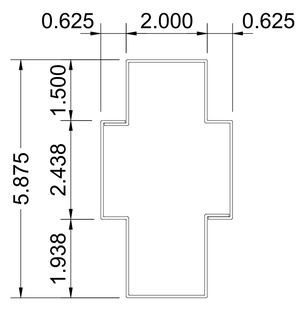

UNREINF. MULLION

Ix =3.001 in^4
Sx = 1.0636 in^3

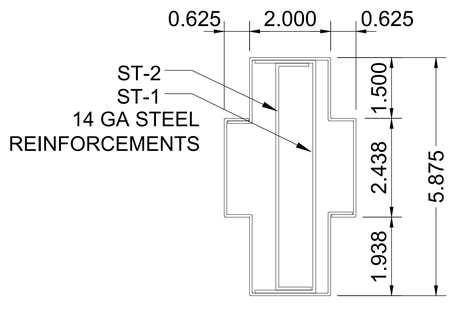

REINF. MULLION W/ ST-1 & ST-2

Ix = 7.508 in^4
Sx = 2.5953 in^3

PRODUCT REVISED
as complying with the Florida Building Code
NOA-No. 20-1230.08
Expiration Date 10/02/2022
By Ishaq I. Chanda
Miami-Dade Product Control

MIAMI DADE COUNTY

YIPING WANG
LICENSE No. 55983
STATE OF FLORIDA
PROFESSIONAL ENGINEER

YIPING WANG, P.E.
FLORIDA REGISTRATION
PE #55983
C.A.N. 28677

December 24th, 2020

REVISIONS			
NO.	DATE	DESCRIPTION	
1	03.29.18	UPDATE TO 2017 FBC	
2	11.24.20	UPDATE TO 2020 FBC	

MCY ENGINEERING, INC.
GLAZING CONSULTANTS
12781 Miramar Parkway #301 P:(305) 271-0117
Miramar, FL 33027
www.MCYEngineering.com mcy@mcyengineering.com

GENSTORM STEEL STOREFRONT SYSTEM - LMI & SMI

Gensteel Doors
www.gensteeldoors.com
4950 Hickmore, St. Laurent, Quebec, Canada, H4T1K6
Tel: (514) 733-3562 Fax: (514) 733-1932

DATE	11/24/2020
SCALE	AS NOTED
DRAWN	C.Y.
PROJECT	MCY 14-014

DRAWING NO.
AD14-01

DOOR JAMB MULLION LOAD CAPACITY - PSF				
NOMINAL DIMS.				LOADS -PSF
FRAME HEIGHT IN	DOOR HEIGHT IN	WIDTH (W2) IN	WIDTH (WI) IN	EXT.(+) INT.(-)
108	84	72	18	70
			24	70
			30	70
			36	70
		84	18	70
			24	70
			30	70
			36	70
		96	18	70
			24	70
			30	70
			36	67
114	84	72	18	70
			24	70
			30	70
			36	70
		84	18	70
			24	70
			30	70
			36	67
		96	18	70
			24	70
			30	66
			36	62
120	84	72	18	70
			24	70
			30	70
			36	70
		84	18	70
			24	69
			30	65
			36	61
		96	18	66
			24	62

DOOR JAMB MULLION LOAD CAPACITY - PSF				
NOMINAL DIMS.				LOADS -PSF
FRAME HEIGHT IN	DOOR HEIGHT IN	WIDTH (W2) IN	WIDTH (WI) IN	EXT.(+) INT.(-)
108	90	72	18	70
			24	70
			30	70
			36	70
		84	18	70
			24	70
			30	70
			36	70
		96	18	70
			24	70
			30	70
			36	68
114	90	72	18	70
			24	70
			30	70
			36	70
		84	18	70
			24	70
			30	70
			36	69
		96	18	70
			24	70
			30	68
			36	63
120	90	72	18	70
			24	70
			30	70
			36	70
		84	18	70
			24	70
			30	68
			36	64
		96	18	70
			24	66

DOOR JAMB MULLION LOAD CAPACITY - PSF				
NOMINAL DIMS.				LOADS -PSF
FRAME HEIGHT IN	DOOR HEIGHT IN	WIDTH (W2) IN	WIDTH (WI) IN	EXT.(+) INT.(-)
108	96	72	18	70
			24	70
			30	70
			36	70
		84	18	70
			24	70
			30	70
			36	70
		96	18	70
			24	70
			30	70
			36	67
114	96	72	18	70
			24	70
			30	70
			36	70
		84	18	70
			24	70
			30	70
			36	70
		96	18	70
			24	70
			30	68
			36	65
120	96	72	18	70
			24	70
			30	70
			36	70
		84	18	70
			24	70
			30	70
			36	66
		96	18	70
			24	70

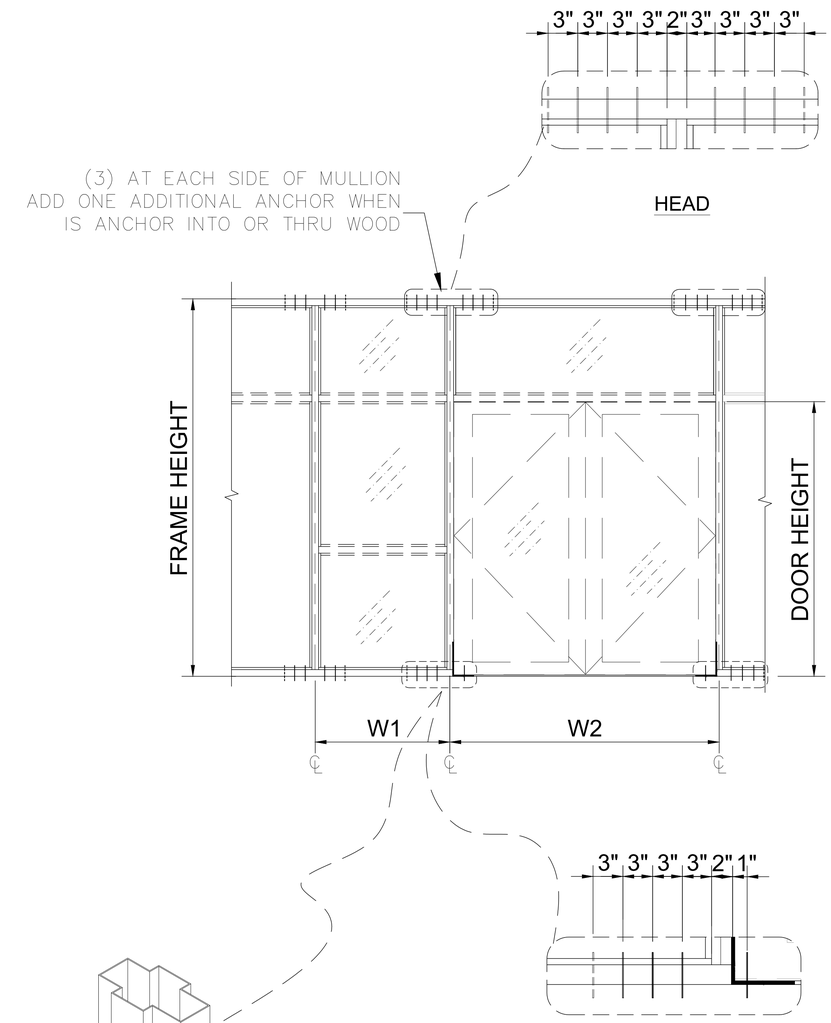

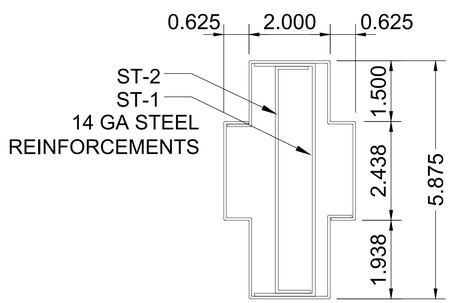

REINF. MULLION W/ ST-1 & ST-2

Ix = 7.508 in^4
Sx = 2.5953 in^3

PRODUCT REVISED
as complying with the Florida Building Code
NOA-No. 20-1230.08
Expiration Date 10/02/2022
By Ishwar I. Chanda
Miami-Dade Product Control

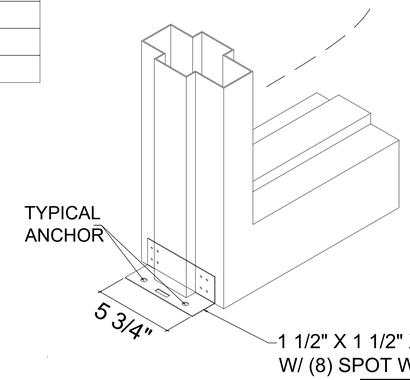

REVERSE FLOOR ANCHOR AT
HINGE STRIKE/MULLION

A
05

MIAMI DADE COUNTY

YIPING WANG
LICENSE
No. 55983
STATE OF FLORIDA
PROFESSIONAL ENGINEER

YIPING WANG, P.E.
FLORIDA REGISTRATION
PE #55983
C.A.N. 28677

December 24th, 2020

REVISIONS

NO.	DATE	DESCRIPTION
1	03.29.18	UPDATE TO 2017 FBC
2	11.24.20	UPDATE TO 2020 FBC

MCY ENGINEERING, INC.
GLAZING CONSULTANTS
12781 Miramar Parkway #301 P:(305) 271-0117
Miramar, FL 33027
www.MCYEngineering.com mcy@mcyengineering.com

GENSTORM STEEL STOREFRONT SYSTEM - LMI & SMI

Gensteel doors
www.gensteeldoors.com
4950 Hickmore, St. Laurent, Quebec, Canada, H4T1K6
Tel: (514) 733-3562 Fax: (514) 733-1932

DATE	11/24/2020
SCALE	AS NOTED
DRAWN	C.Y.
PROJECT	MCY 14-014

DRAWING NO.
AD14-01

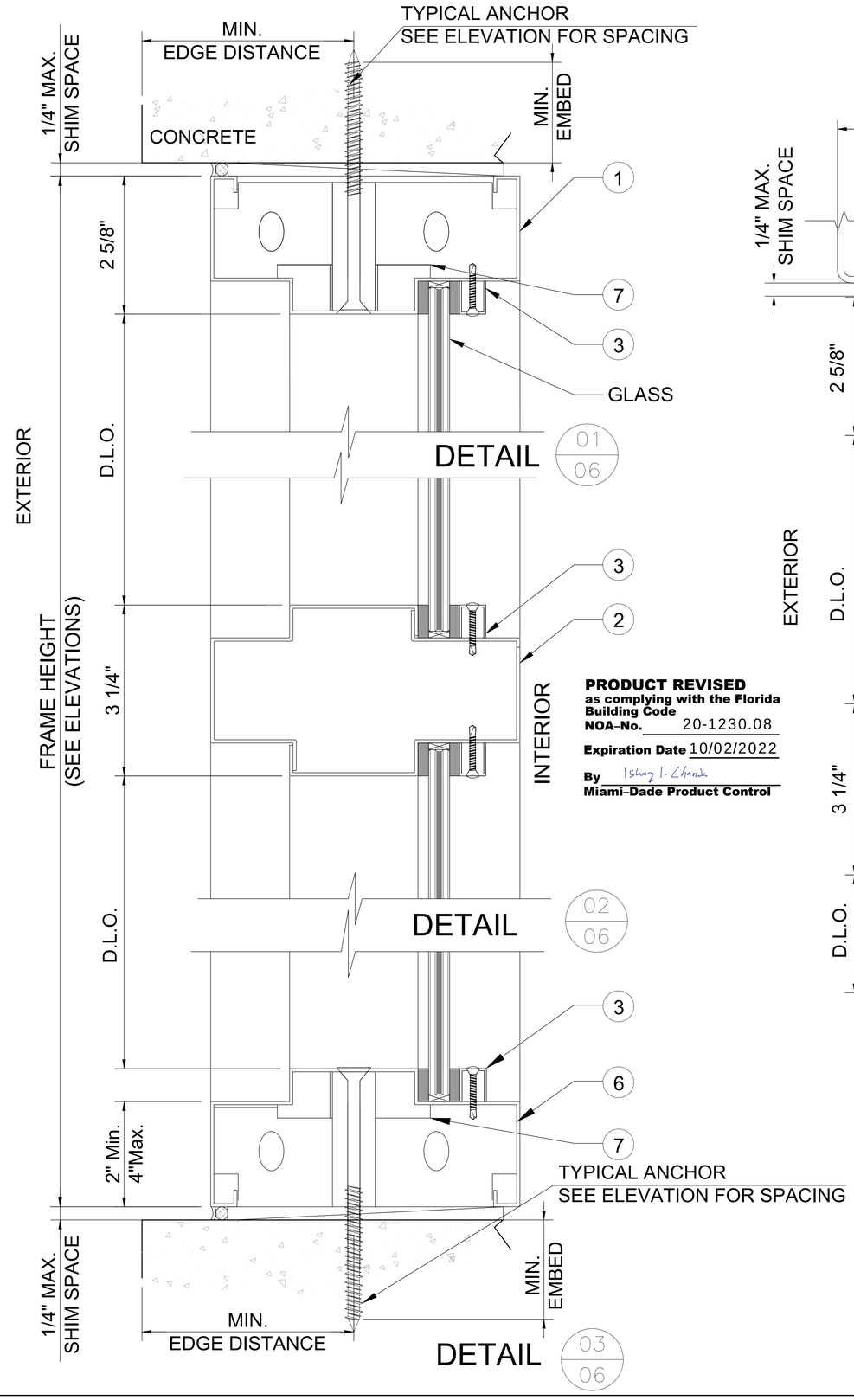

PRODUCT REVISED
as complying with the Florida Building Code
NOA-No. 20-1230.08
Expiration Date 10/02/2022
By Ishwar I. Chandra
Miami-Dade Product Control

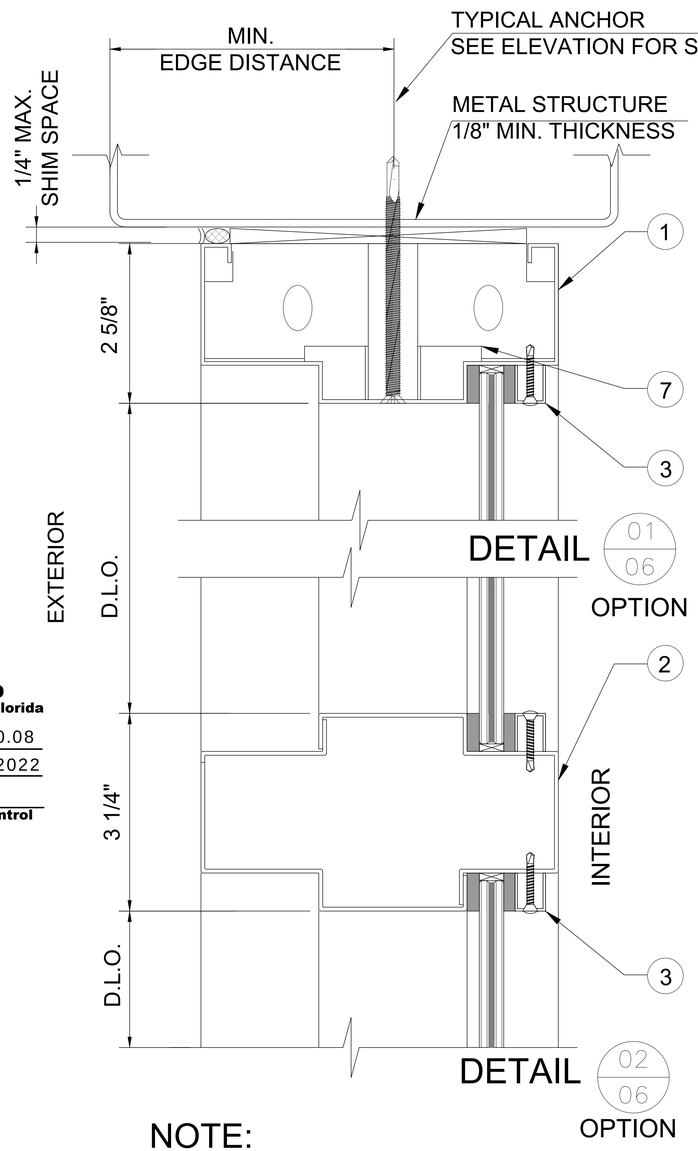

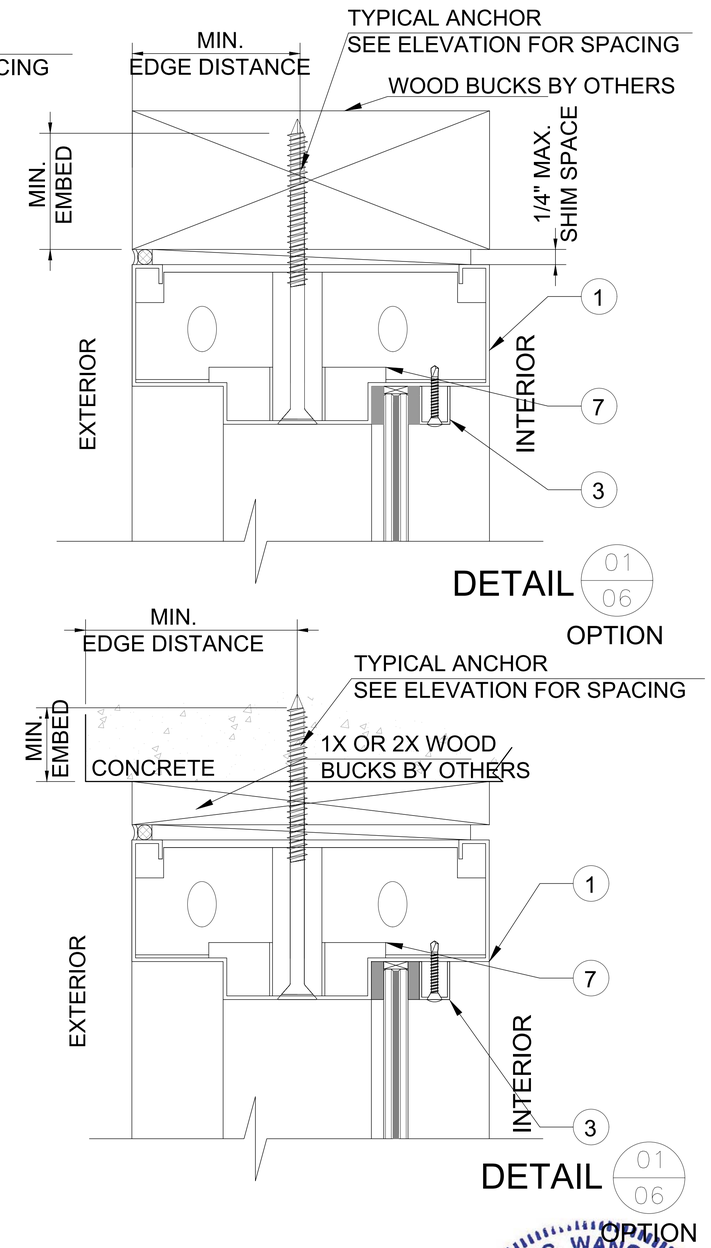

NOTE:

INSIDE GLAZING OPTION SHOWN.
EXTERIOR GLAZING IS AN OPTION,
FOR DETAIL SEE SHEET 3.

WOOD BUCK OR METAL STRUCTURES NOT BY GENSTEEL MUST BY ANCHORED PROPERLY TO SUPPORT LOADS IMPOSED BY GLAZING SYSTEM AND TRANSFER THEM TO THE BUILDING STRUCTURE.

MIAMI DADE COUNTY

YIPING WANG
LICENSE
No. 55983
STATE OF FLORIDA
PROFESSIONAL ENGINEER

YIPING WANG, P.E.
FLORIDA REGISTRATION
PE #55983
C.A.N. 28677

December 24th, 2020

REVISIONS			
NO.	DATE	DESCRIPTION	
1	03.29.18	UPDATE TO 2017	FBC
2	11.24.20	UPDATE TO 2020	FBC

MCY ENGINEERING, INC.
GLAZING CONSULTANTS
12781 Miramar Parkway #301 P:(305) 271-0117
Miramar, FL. 33027
www.MCYEngineering.com mcy@mcyengineering.com

GENSTORM STEEL STOREFRONT SYSTEM - LMI & SMI

gensteel doors
www.gensteeldoors.com
4950 Hickmore, St. Laurent, Quebec, Canada, H4T1K6
Tel: (514) 733-3562 Fax: (514) 733-1932

DATE	11/24/2020
SCALE	AS NOTED
DRAWN	C.Y.
PROJECT	MCY 14-014

DRAWING NO.
AD14-01

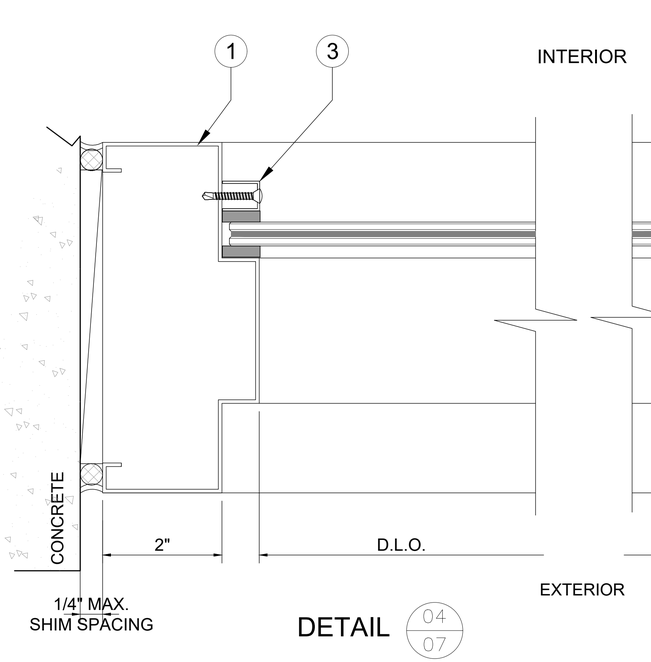

DETAIL 04/07

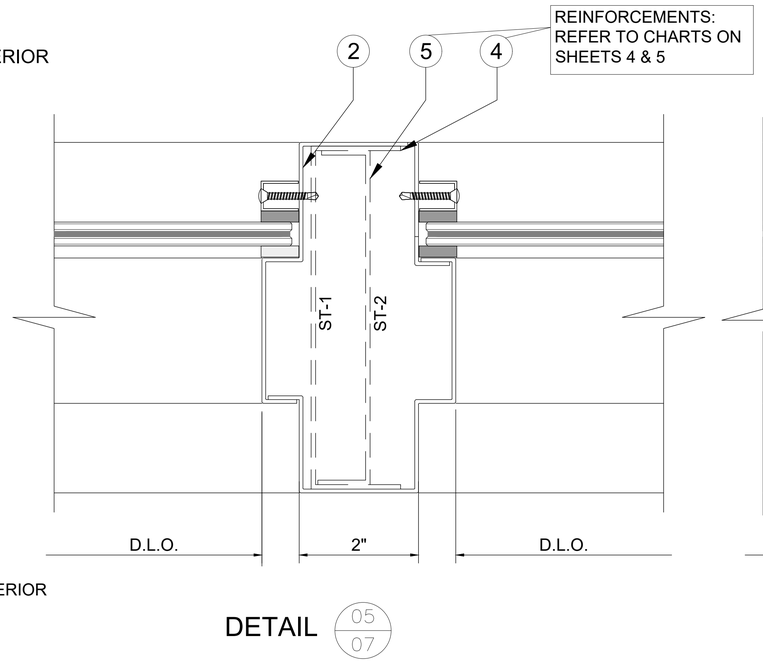

DETAIL 05/07

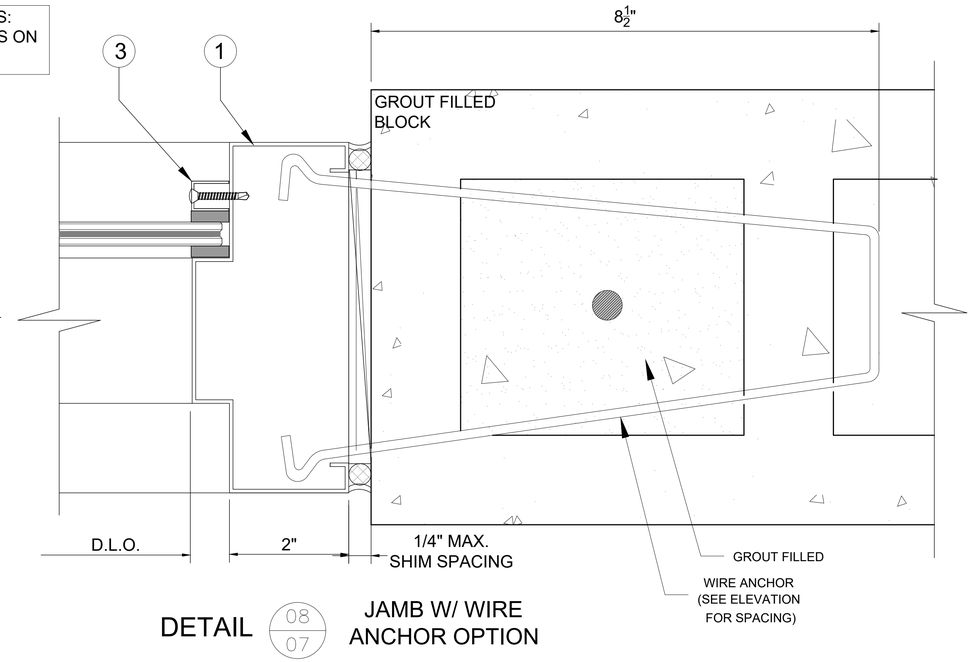

DETAIL 08/07 JAMB W/ WIRE ANCHOR OPTION

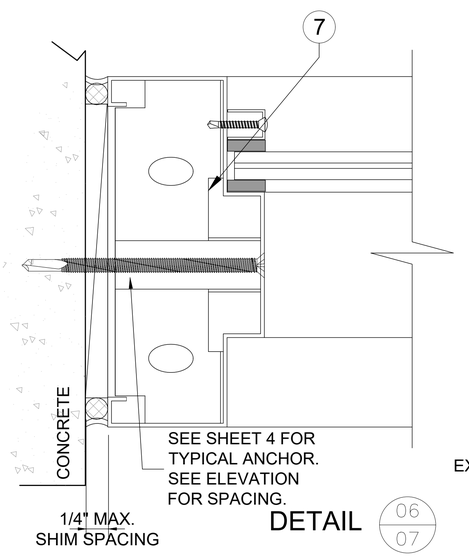

DETAIL 06/07

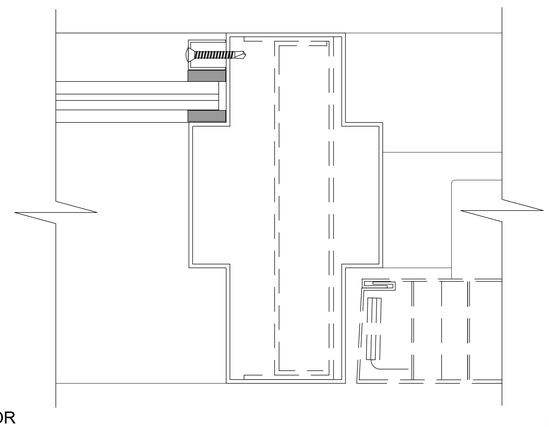

DETAIL 07/07 DOOR JAMB MULLION W/ OUTSWING DOOR OPTION

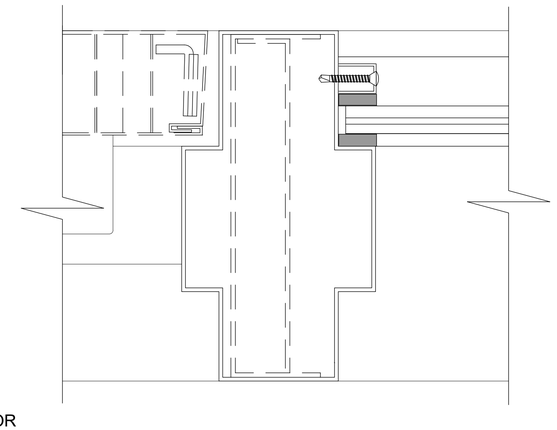

DETAIL 07/07 DOOR JAMB MULLION W/ INSWING DOOR OPTION

	GAP	
MAX.F.H.	MIN.	MAX.
78"	1/4"	1/2"
120"	3/8"	1/2"

PRODUCT REVISED
as complying with the Florida Building Code
NOA-No. 20-1230.08
Expiration Date 10/02/2022
By Ishwar I. Chandra
Miami-Dade Product Control

MIAMI-DADE COUNTY
YIPING WANG, P.E.
FLORIDA REGISTRATION
No. P.E. #55983
C.A.N. 2867

YIPING WANG LICENSE No 55983 STATE OF FLORIDA PROFESSIONAL ENGINEER

December 24th, 2020

REVISIONS

NO.	DATE	DESCRIPTION
1	03.29.18	UPDATE TO 2017 FBC
2	11.24.20	UPDATE TO 2020 FBC

MCY ENGINEERING, INC.
GLAZING CONSULTANTS
12781 Miramar Parkway #301 P:(305) 271-0117
Miramar, FL 33027
www.MCYEngineering.com mcy@mcyengineering.com

GENSTORM STEEL STOREFRONT SYSTEM - LMI & SMI

gensteel doors
www.gensteeldoors.com
4950 Hickmore, St. Laurent, Quebec, Canada, H4T1K6
Tel: (514) 733-3562 Fax: (514) 733-1932

DATE	11/24/2020
SCALE	AS NOTED
DRAWN	C.Y.
PROJECT	MCY 14-014

DRAWING NO.
AD14-01

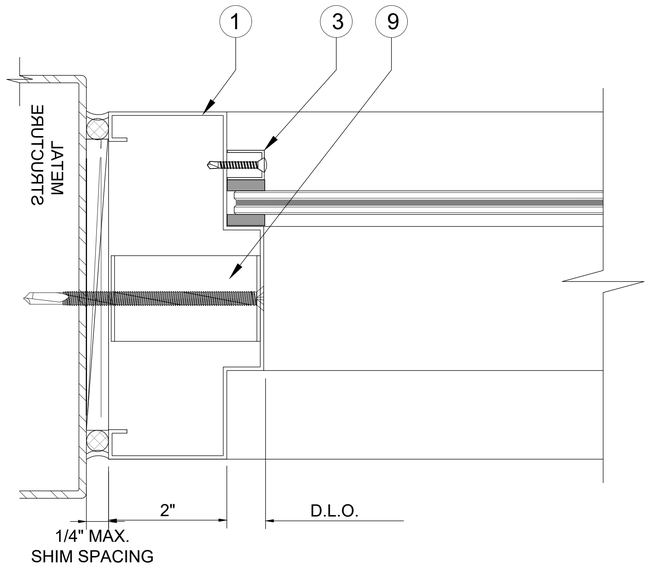

OPTION 09/08 JAMB W/ EMA BRACKET ANCHOR

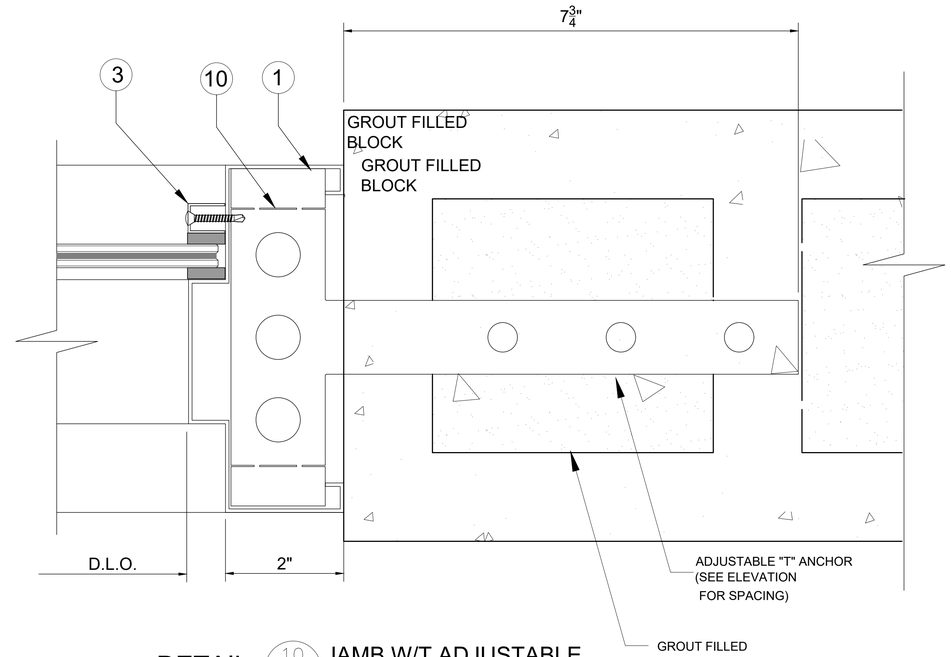

DETAIL 10/08 JAMB W/T ADJUSTABLE " T" ANCHOR OPTION

PRODUCT REVISED
as complying with the Florida Building Code
NOA-No. 20-1230.08
Expiration Date 10/02/2022
By Ishwag I. Chanda
Miami-Dade Product Control

MANDATORY COMMENTS
YIRONG WANG, P.E.
FLORIDA REGISTRATION
PE #55983
C.A.N. 28677

YIRONG WANG
LICENSE
No 55983
STATE OF FLORIDA
PROFESSIONAL ENGINEER

December 24th, 2020

REVISIONS

NO.	DATE	DESCRIPTION
1	03.29.18	UPDATE TO 2017 FBC
2	11.24.20	UPDATE TO 2020 FBC

MCY ENGINEERING, INC.
GLAZING CONSULTANTS
12781 Miramar Parkway #301 P:(305) 271-0117
Miramar, FL 33027
www.MCYEngineering.com mcy@mcyengineering.com

GENSTORM STEEL STOREFRONT SYSTEM - LMI & SMI

gensteel doors
www.gensteeldoors.com
4950 Hickmore, St. Laurent, Quebec, Canada, H4T1K6
Tel: (514) 733-3562 Fax: (514) 733-1932

DATE	11/24/2020
SCALE	AS NOTED
DRAWN	C.Y.
PROJECT	MCY 14-014

DRAWING NO.
AD14-01

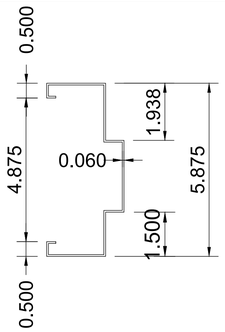

1 FRAME HEAD / JAMB
STEEL 16GA

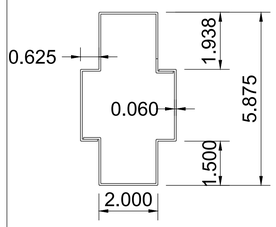

2 HORIZONTAL / VERTICAL MULLION
STEEL 16GA

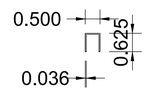

3 GLAZING STOP
STEEL 20GA

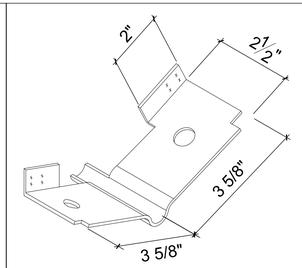

7 FA-3010 ANCHOR
STEEL 18GA

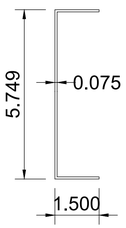

4 STEEL REINFORCEMENT (ST-1)
STEEL 14GA

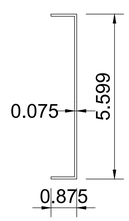

5 STEEL REINFORCEMENT (ST-2)
STEEL 14GA

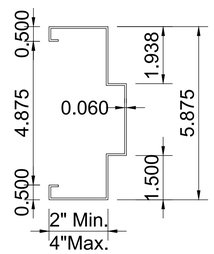

6 FRAME SILL
STEEL 16GA

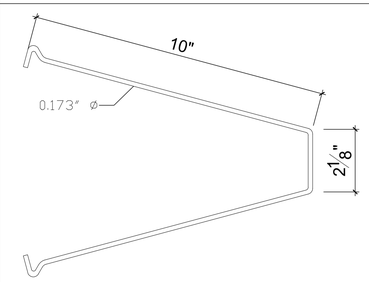

8 FA3030 WIRE ANCHOR
STEEL 20GA

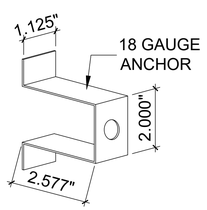

9 FA3012 18 GA
EMA BRACKET ANCHOR

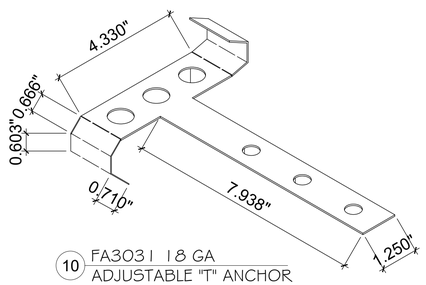

10 FA3031 18 GA
ADJUSTABLE "T" ANCHOR

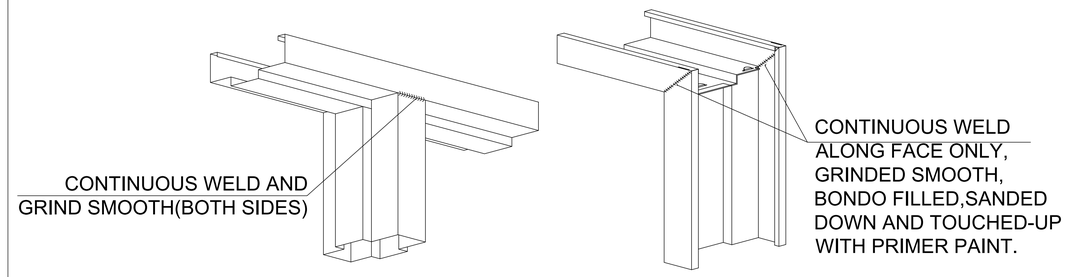

TOP FRAME CORNER CONNECTION DETAIL

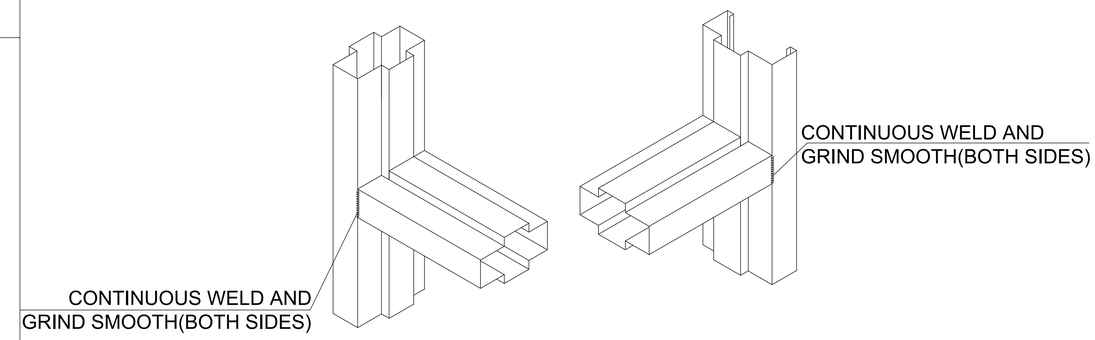

HORIZONTAL TO MULLION CONNECTION DETAIL

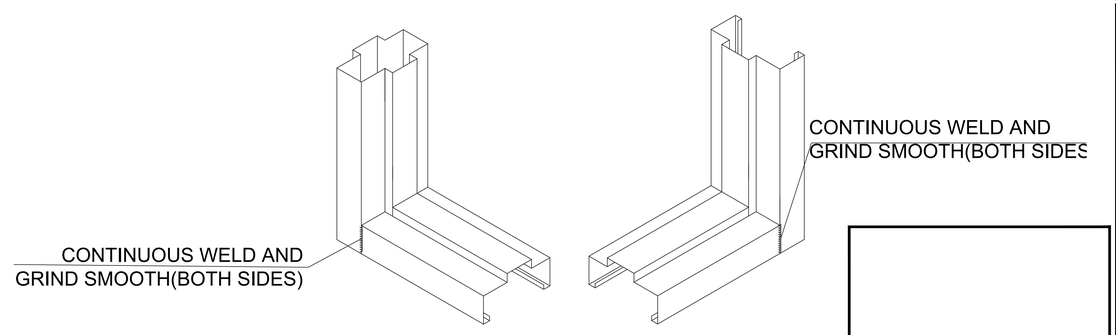

BOTTOM FRAME CORNER CONNECTION DETAIL

PRODUCT REVISED
as complying with the Florida Building Code
NOA-No. 20-1230.08
Expiration Date 10/02/2022
By Ishwar I. Chandra
Miami-Dade Product Control

ITEM NO.	QUANTITY	DESCRIPTION	MATERIAL	YIELD STRESS	MANF./ SUPPLIER / REMARKS
1	AS REQD.	FRAME HEAD / SILL / JAMB	GALVANNEAL STEEL	40.8 KSI	GENSTEEL /ASTM A653 16 GA. COLD FORMED
2	AS REQD.	HORIZONTAL/VERTICAL MULLION	GALVANNEAL STEEL	40.8 KSI	GENSTEEL /ASTM A653 16 GA. COLD FORMED
3	AS REQD.	GLAZING STOP	GALVANNEAL STEEL	40.8 KSI	GENSTEEL /ASTM A653 20 GA. COLD FORMED
4	AS REQD.	ST-1 REINFORCEMENT	GALVANNEAL STEEL	40.8 KSI	GENSTEEL /ASTM A653 14 GA. COLD FORMED
5	AS REQD.	ST-2 REINFORCEMENT	GALVANNEAL STEEL	40.8 KSI	GENSTEEL /ASTM A653 14 GA. COLD FORMED
6	AS REQD.	FRAME SILL	GALVANNEAL STEEL	40.8 KSI	GENSTEEL /ASTM A653 16 GA. COLD FORMED
7	AS REQD.	FA-3010 ANCHOR	GALVANNEAL STEEL	40.8 KSI	GENSTEEL /ASTM A653 18 GA. COLD FORMED
8	AS REQD.	FA-3030 WIRE ANCHOR	GALVANNEAL STEEL	40.8 KSI	GENSTEEL /ASTM A653 WIRE 0.1570. COLD FORMED
9	AS REQD.	3012 EMA BRACKET ANCHOR	GALVANNEAL STEEL	40.8 KSI	GENSTEEL /ASTM A653 18 GA. COLD FORMED
10	AS REQD.	3031 MASONRY ANCHOR BRACKET	GALVANNEAL STEEL	40.8 KSI	GENSTEEL /ASTM A653 18 GA. COLD FORMED

YIRONG WANG
LICENSE
No 55983
STATE OF FLORIDA
PROFESSIONAL ENGINEER

MANDATORY CERTIFICATE
YIRONG WANG, P.E.
FLORIDA REGISTRATION
PE #55983
C.A.N. 28677

December 24th, 2020

REVISIONS

NO.	DATE	DESCRIPTION
1	03.29.18	UPDATE TO 2017 FBC
2	11.24.20	UPDATE TO 2020 FBC

MCY ENGINEERING, INC.
GLAZING CONSULTANTS
12781 Miramar Parkway #301 P:(305) 271-0117
Miramar, FL 33027
www.MCYEngineering.com mcy@mcyengineering.com

GENSTORM STEEL STOREFRONT SYSTEM - LMI & SMI

gensteel doors
www.gensteeldoors.com
4950 Hickmore, St. Laurent, Quebec, Canada, H4T1K6
Tel: (514) 733-3562 Fax: (514) 733-1932

DATE	11/24/2020
SCALE	AS NOTED
DRAWN	C.Y.
PROJECT	MCY 14-014

DRAWING NO.
AD14-01